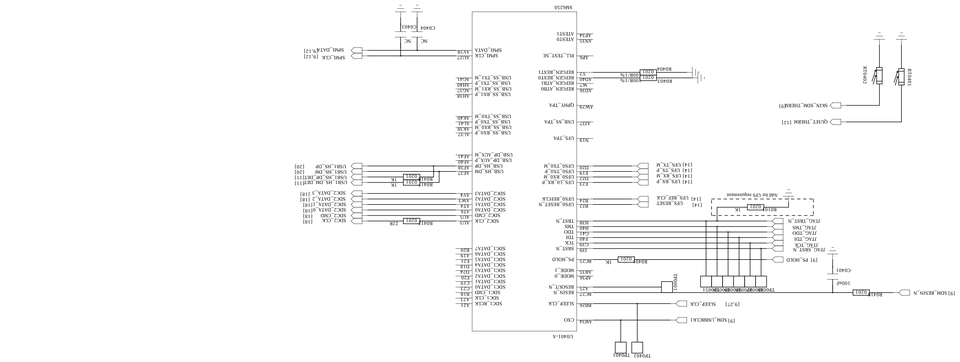
U1601-A
TP1601 TP1602
[5] SQM_LNBRCLK1
[5] SQM_ENSIN_N
[5] JT1
[9] SQM_CLK [9:1]
[9] SQM_DATA [9:1]
[9] SQM_DATA [9:1]
[5] PS_JOCD
[5] PS_JOCD
[14] EPS_JOCD
[14] EPS_JOCD
[14] EP

REVISION RECORD			
LTR	ECO NO:	APPROVED:	DATE:

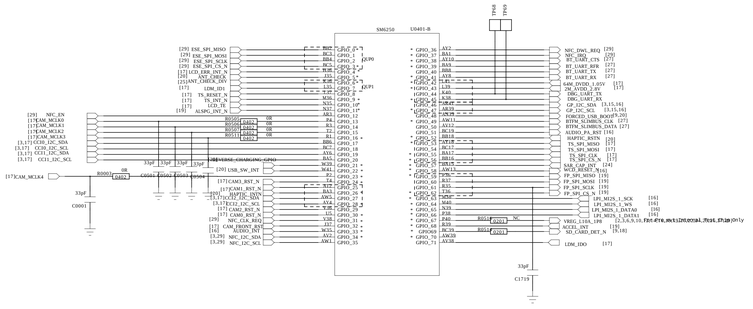

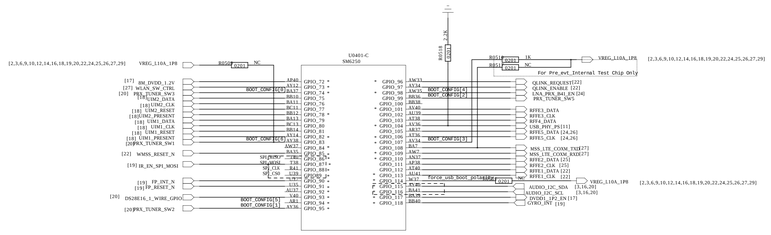

DRAWN: <Drawn By>	DATED: <Drawn Date>	COMPANY: <Company Name>	
CHECKED: <Checked By>	DATED: <Checked Date>	TITLE: <Title>	
QUALITY CONTROL: <QC By>	DATED: <QC Date>	CODE: <Code>	SIZE: A0
RELEASED: <Released By>	DATED: <Release Date>	DRAWING NO: <Drawing Number>	REV: <Revision>
		SCALE: <Scale>	SHEET: 2 OF 30

REVISION RECORD			
LTR	ECO NO:	APPROVED:	DATE:

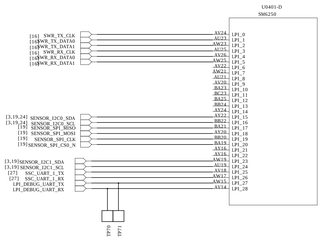

I2C BUS PULL UPS

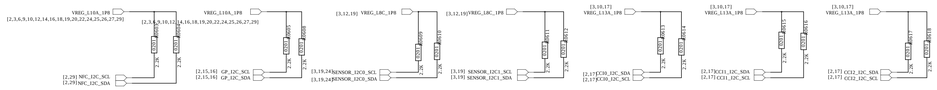

DRAWN: <Drawn By>	DATED: <Drawn Date>	COMPANY: <Company Name>			
CHECKED: <Checked By>	DATED: <Checked Date>	TITLE: <Title>			
QUALITY CONTROL: <QC By>	DATED: <QC Date>	CODE: <Code>	SIZE: A0	DRAWING NO: <Drawing Number>	REV: <Revision>
RELEASED: <Released By>	DATED: <Release Date>	SCALE: <Scale>		SHEET: 3 of 30	

REVISION RECORD			
LTR	ECO NO:	APPROVED:	DATE:

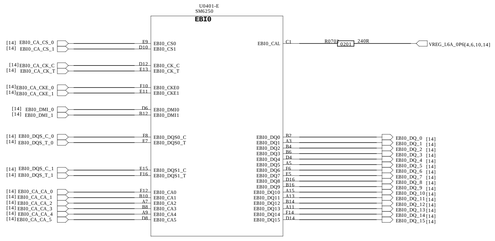

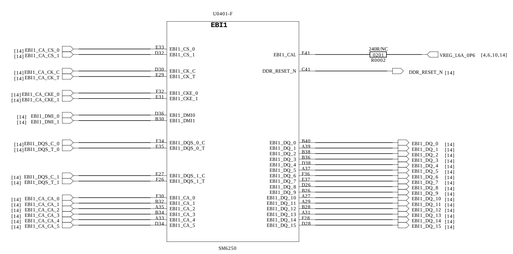

DRAWN: <Drawn By>	DATED: <Drawn Date>	COMPANY: <Company Name>		
CHECKED: <Checked By>	DATED: <Checked Date>	TITLE: <Title>		
QUALITY CONTROL: <QC By>	DATED: <QC Date>	CODE: <Code>	SIZE: A0	DRAWING NO: <Drawing Number> REV: <Revision>
RELEASED: <Released By>	DATED: <Release Date>	SCALE: <Scale>	SHEET: 4 OF 30	

REVISION RECORD			
LTR	ECO NO:	APPROVED:	DATE:

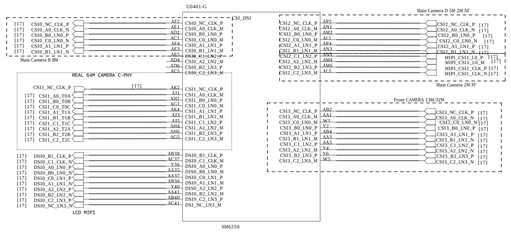

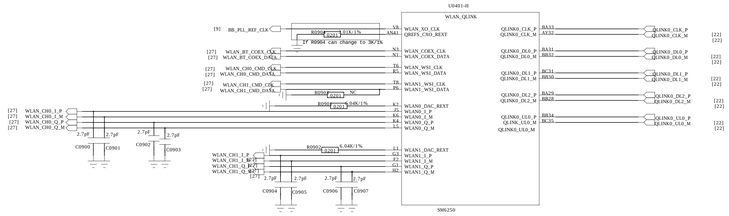

DRAWN: <Drawn By>	DATED: <Drawn Date>	COMPANY: <Company Name>	
CHECKED: <Checked By>	DATED: <Checked Date>	TITLE: <Title>	
QUALITY CONTROL: <QC By>	DATED: <QC Date>	CODE: <Code>	SIZE: A0 / DRAWING NO: <Drawing Number> / REV: <Revision>
RELEASED: <Released By>	DATED: <Release Date>	SCALE: <Scale>	SHEET: 5 OF 30

REVISION RECORD			
LTR	ECO NO:	APPROVED:	DATE:

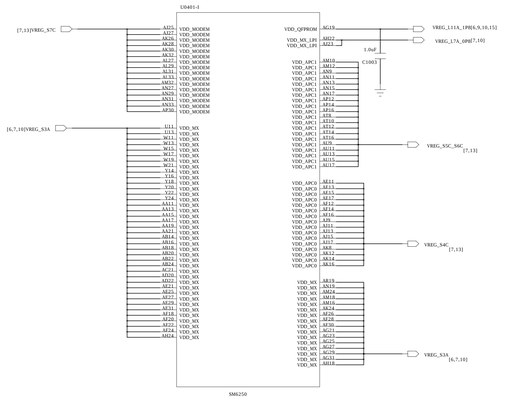

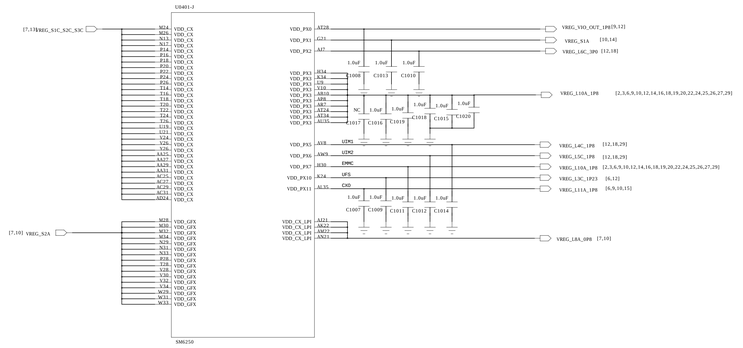

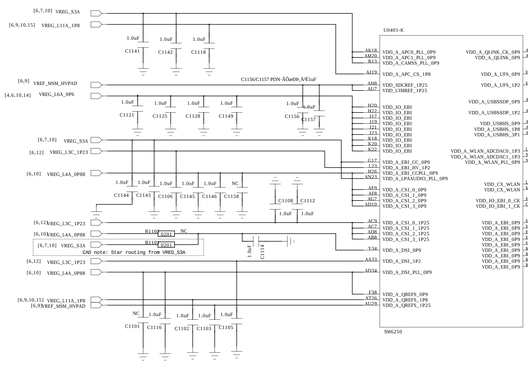

DRAWN: <Drawn By>	DATED: <Drawn Date>	COMPANY: <Company Name>	
CHECKED: <Checked By>	DATED: <Checked Date>	TITLE: <Title>	
QUALITY CONTROL: <QC By>	DATED: <QC Date>	CODE: <Code>	SIZE: A0
RELEASED: <Released By>	DATED: <Release Date>	DRAWING NO: <Drawing Number>	REV: <Revision>
SCALE: <Scale>		SHEET: 6 of 30	

REVISION RECORD			
LTR	ECO NO:	APPROVED:	DATE:

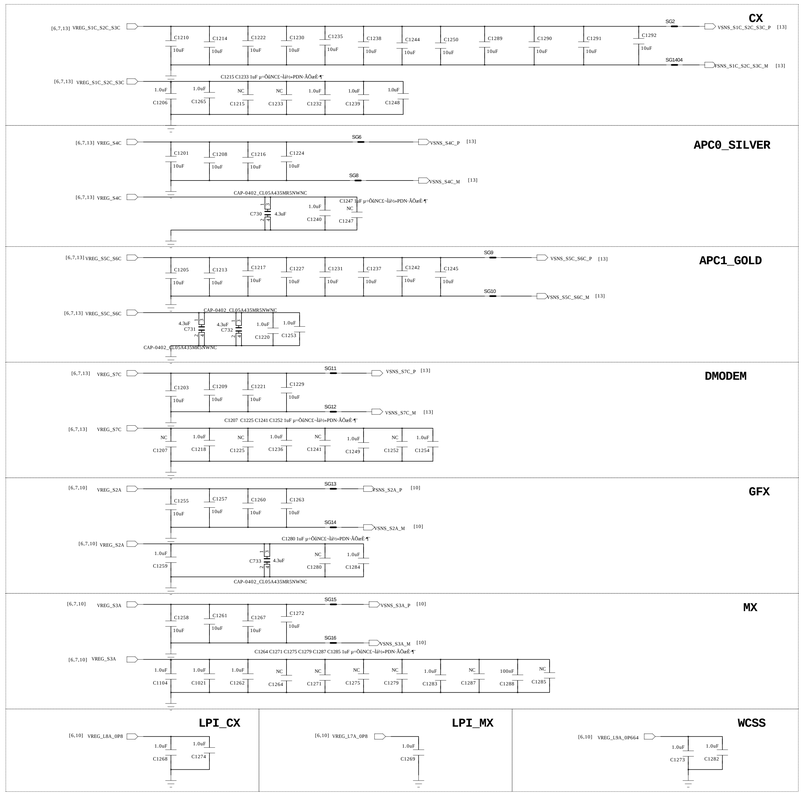

DRAWN: <Drawn By>	DATED: <Drawn Date>	COMPANY: <Company Name>	
CHECKED: <Checked By>	DATED: <Checked Date>	TITLE: <Title>	
QUALITY CONTROL: <QC By>	DATED: <QC Date>	CODE: <Code>	SIZE: A0
RELEASED: <Released By>	DATED: <Release Date>	DRAWING NO: <Drawing Number>	REV: <Revision>
		SCALE: <Scale>	SHEET: 7 OF 30

REVISION RECORD			
LTR	ECO NO:	APPROVED:	DATE:

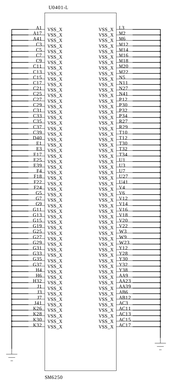

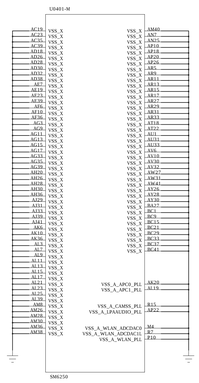

		COMPANY: <Company Name>			
		TITLE: <Title>			
DRAWN: <Drawn By>	DATED: <Drawn Date>				
CHECKED: <Checked By>	DATED: <Checked Date>	CODE: <Code>	SIZE: A0	DRAWING NO: <Drawing Number>	REV: <Revision>
QUALITY CONTROL: <QC By>	DATED: <QC Date>				
RELEASED: <Released By>	DATED: <Release Date>	SCALE: <Scale>		SHEET: 8 OF 30	

REVISION RECORD			
LTR	ECO NO:	APPROVED:	DATE:

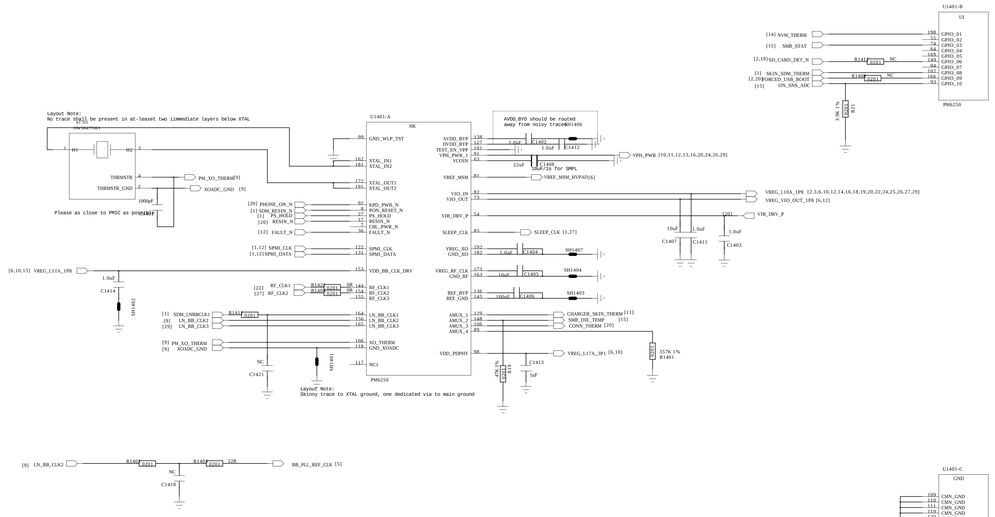

DRAWN: <Drawn By>	DATED: <Drawn Date>	COMPANY: <Company Name>			
CHECKED: <Checked By>	DATED: <Checked Date>	TITLE: <Title>			
QUALITY CONTROL: <QC By>	DATED: <QC Date>	CODE: <Code>	SIZE: A0	DRAWING NO: <Drawing Number>	REV: <Revision>
RELEASED: <Released By>	DATED: <Release Date>	SCALE: <Scale>		SHEET: 9 of 30	

REVISION RECORD			
LTR	ECO NO:	APPROVED:	DATE:

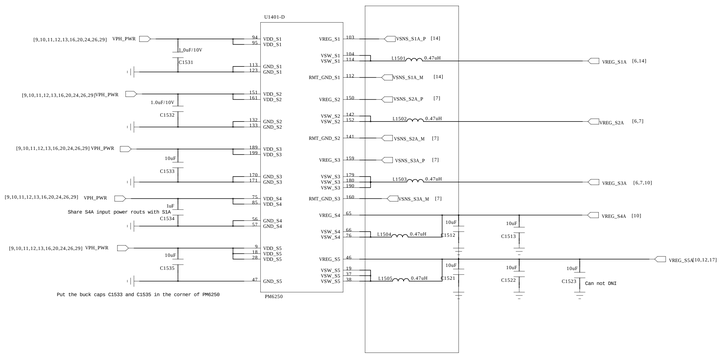

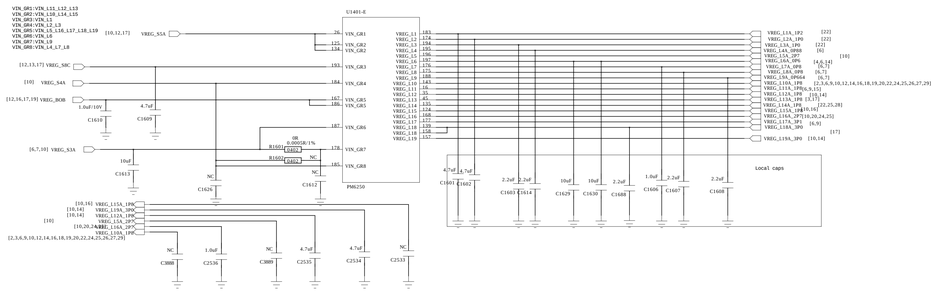

Pseudo capless allows users to place the LDO output capacitor physically/electrically far from the LDO output,near the load.The routing ESL/ESR between the PMIC pin and the remote Cout should meet the capless LDO sepc.
All PMOS LDOs are considered pseudo-capless,unless it has internal PMIC load.If an internal PMIC load,the output cap must be placed close to the PMIC.
Required capacitance for each LDO type can be found in App Note:80-VT310-125

COMPANY: <Company Name>					
TITLE: <Title>					
DRAWN: <Drawn By>	DATED: <Drawn Date>	CODE: <Code>	SIZE: A0	DRAWING NO: <Drawing Number>	REV: <Revision>
CHECKED: <Checked By>	DATED: <Checked Date>				
QUALITY CONTROL: <QC By>	DATED: <QC Date>				
RELEASED: <Released By>	DATED: <Release Date>	SCALE: <Scale>		SHEET: 10 OF 30	

REVISION RECORD			
LTR	ECO NO:	APPROVED:	DATE:

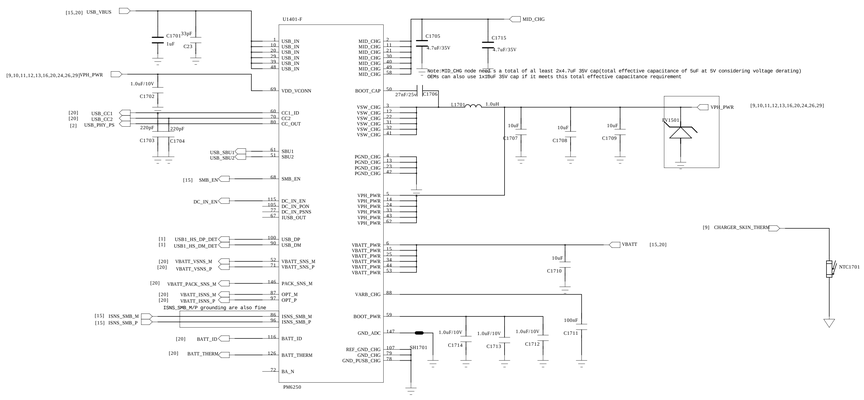

DRAWN: <Drawn By>	DATED: <Drawn Date>	COMPANY: <Company Name>		
CHECKED: <Checked By>	DATED: <Checked Date>	TITLE: <Title>		
QUALITY CONTROL: <QC By>	DATED: <QC Date>	CODE: <Code>	SIZE: A0	DRAWING NO: <Drawing Number> REV: <Revision>
RELEASED: <Released By>	DATED: <Release Date>	SCALE: <Scale>	SHEET: 14	30

REVISION RECORD			
LTR	ECO NO:	APPROVED:	DATE:

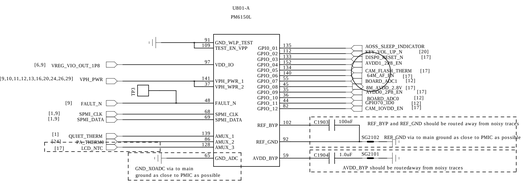

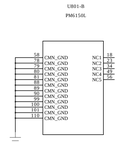

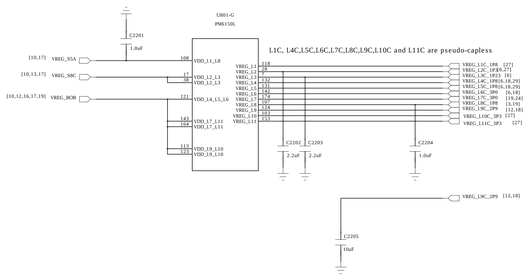

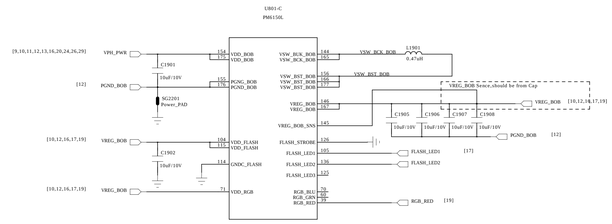

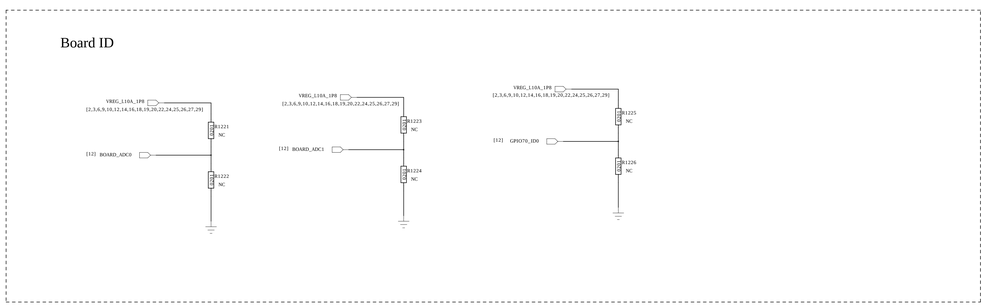

COMPANY:	<Company Name>	
TITLE:	<Title>	
DRAWN: <Drawn By>	DATED: <Drawn Date>	
CHECKED: <Checked By>	DATED: <Checked Date>	
QUALITY CONTROL: <QC By>	DATED: <QC Date>	
RELEASED: <Released By>	DATED: <Release Date>	
CODE: <Code>	SIZE: A0	DRAWING NO: <Drawing Number>
REV: <Revision>		
SCALE: <Scale>	SHEET: 12 OF 30	

REVISION RECORD			
LTR	ECO NO:	APPROVED:	DATE:

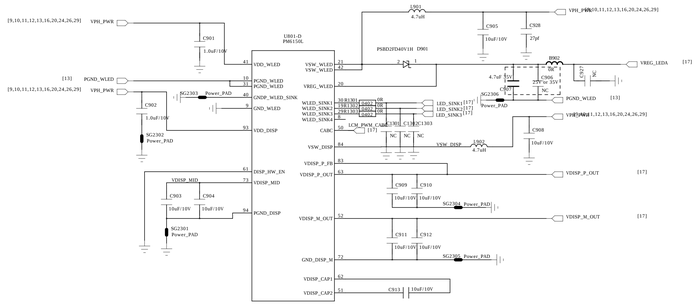

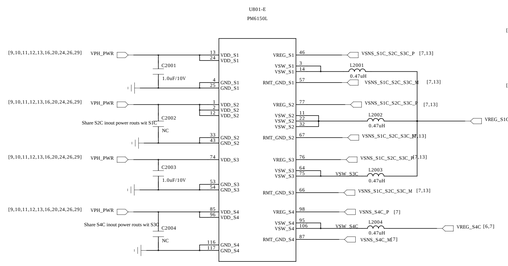

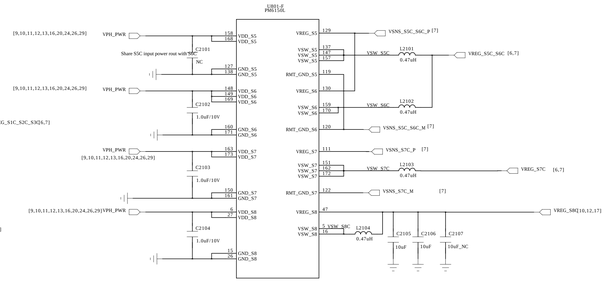

COMPANY: <Company Name>			
TITLE: <Title>			
DRAWN: <Drawn By>	DATED: <Drawn Date>		
CHECKED: <Checked By>	DATED: <Checked Date>	CODE: <Code>	SIZE: A0
QUALITY CONTROL: <QC By>	DATED: <QC Date>	DRAWING NO: <Drawing Number>	REV: <Revision>
RELEASED: <Released By>	DATED: <Release Date>	SCALE: <Scale>	SHEET: 12 OF 30

REVISION RECORD			
LTR	ECO NO:	APPROVED:	DATE:

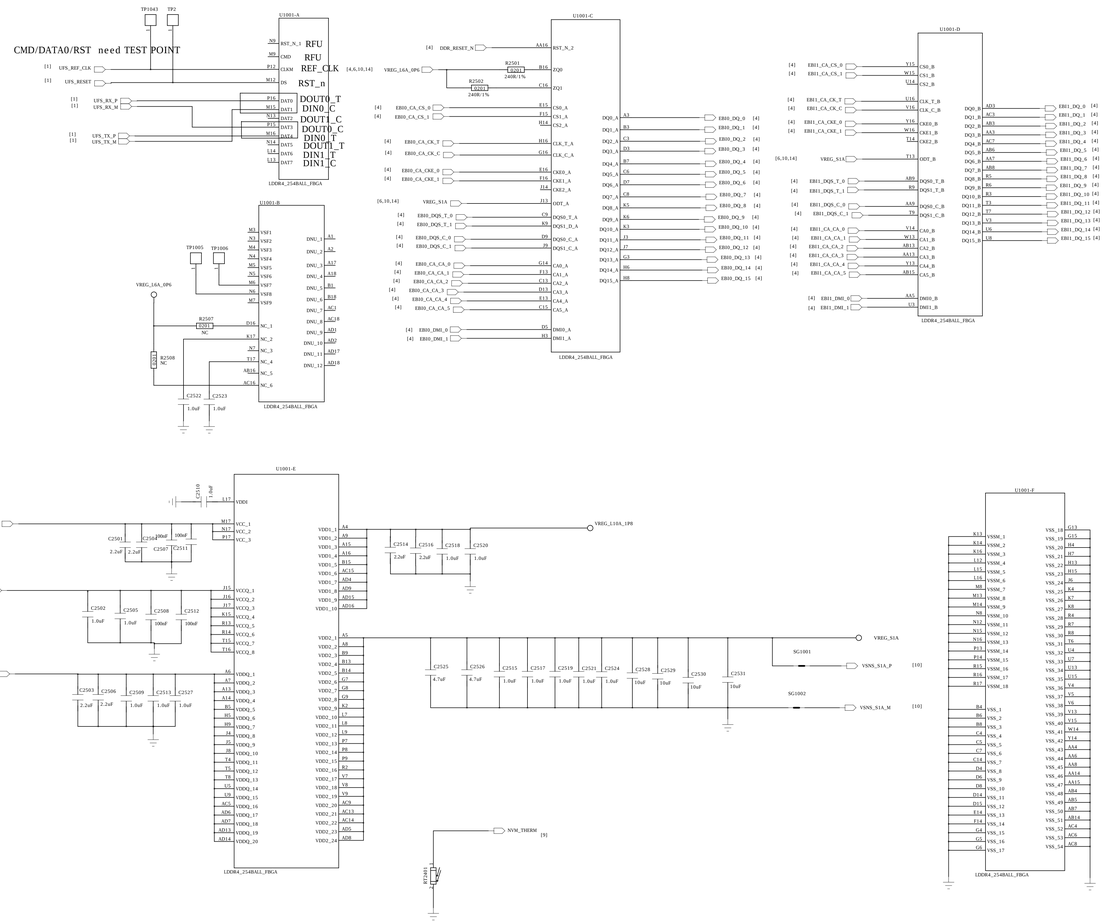

DRAWN: <Drawn By>	DATED: <Drawn Date>	COMPANY: <Company Name>	
CHECKED: <Checked By>	DATED: <Checked Date>	TITLE: <Title>	
QUALITY CONTROL: <QC By>	DATED: <QC Date>	CODE: <Code>	SIZE: A0
RELEASED: <Released By>	DATED: <Release Date>	DRAWING NO: <Drawing Number>	REV: <Revision>
		SCALE: <Scale>	SHEET: 14 OF 30

REVISION RECORD			
LTR	ECO NO:	APPROVED:	DATE:

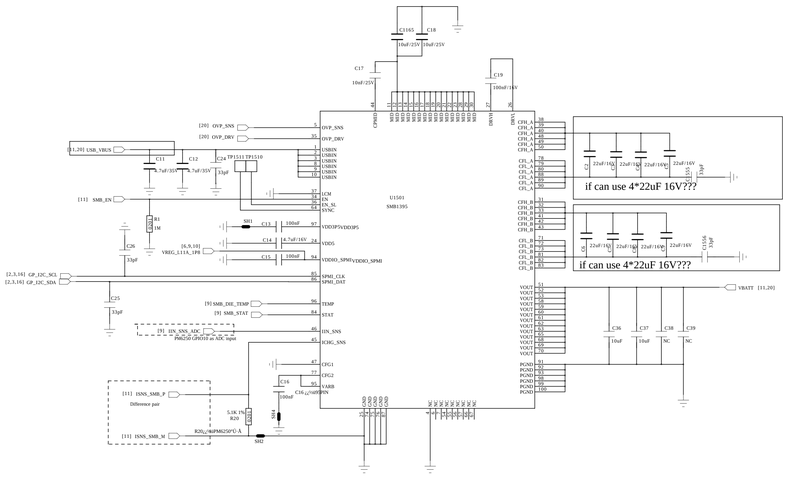

DRAWN: <Drawn By>	DATED: <Drawn Date>	COMPANY: <Company Name>	
CHECKED: <Checked By>	DATED: <Checked Date>	TITLE: <Title>	
QUALITY CONTROL: <QC By>	DATED: <QC Date>	CODE: <Code>	SIZE: A0
RELEASED: <Released By>	DATED: <Release Date>	DRAWING NO: <Drawing Number>	REV: <Revision>
		SCALE: <Scale>	SHEET: 15 OF 30

REVISION RECORD			
LTR	ECO NO:	APPROVED:	DATE:

Audio Codec

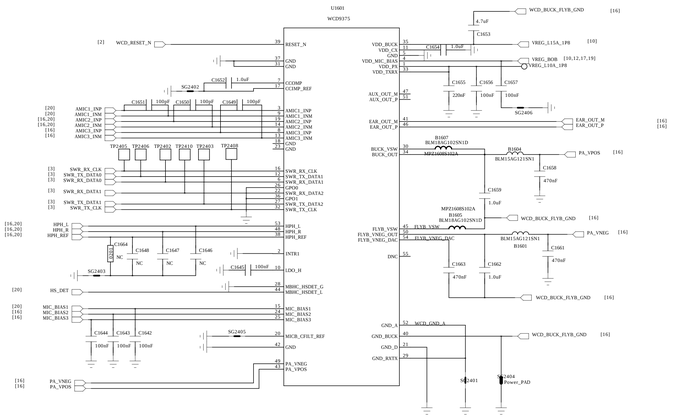

REC

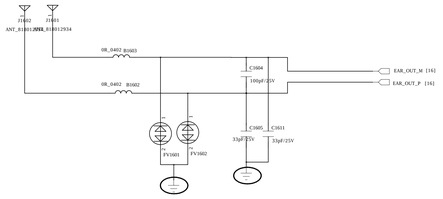

Sub MIC

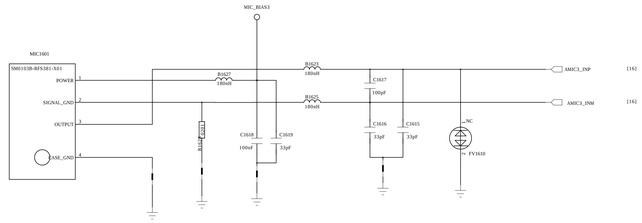

Audio PA

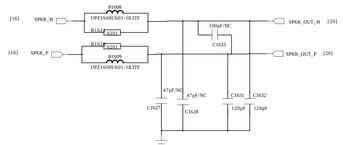

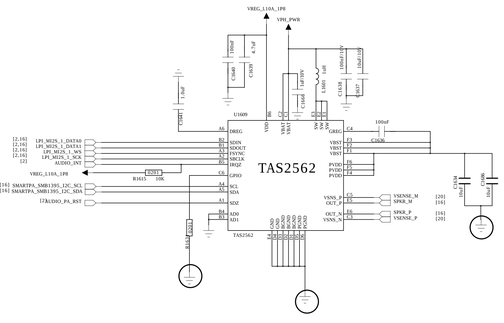

Earphone Audio

GND
HPH_R
HS_DET
HPH_L
MIC_IN

Note: Ferrite beads and their corresponding bypass capacitors on on CDC_HPH_L_P, CDC_HPH_L_M and CDC_HPH_REF are needed to reduce noise generated by audio/FM concurrency

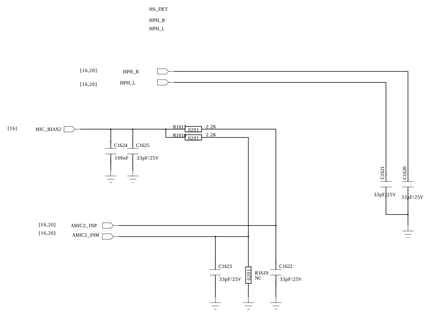

Note: Place B202,B203,C216,C217 close to headset jack connector

Note: For Cable detection

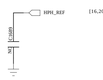

COMPANY: <Company Name>			
TITLE: <Title>			
DRAWN: <Drawn By>	DATED: <Drawn Date>	CODE: <Code>	SIZE: A0
CHECKED: <Checked By>	DATED: <Checked Date>	DRAWING NO: <Drawing Number>	REV: <Revision>
QUALITY CONTROL: <QC By>	DATED: <QC Date>		
RELEASED: <Released By>	DATED: <Release Date>	SCALE: <Scale>	SHEET: 16 OF 30

LTR	ECO NO:	APPROVED:	DATE:

Main Camera B 8M

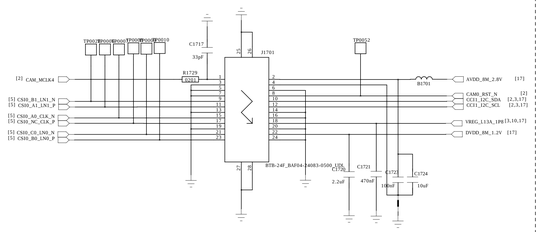

NOTE£ºWL2836D1.2-4/TR

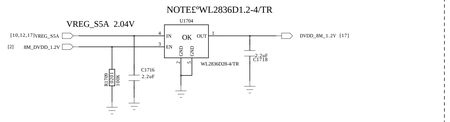

Ç ° Ê ã +8M+5M 2.8V

NOTE£ºWL2836D2.8-4/TR

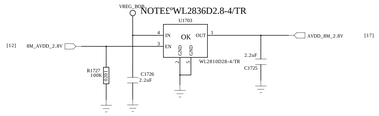

Module	Sensor IC	DOVDD	DVDD	AVDD	AFVDD
	IMX376-AAJHS-C	1.8V	1.05V	2.8V	DW9763 140mA/Max

Main Camera A 64M

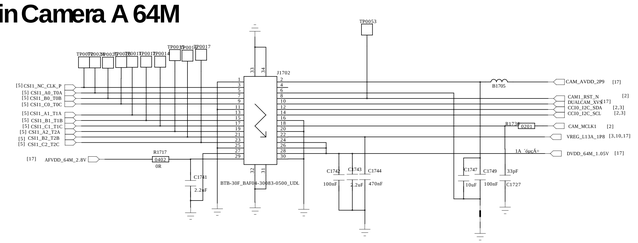

NOTE£ºWL2820D2.8-4/TR

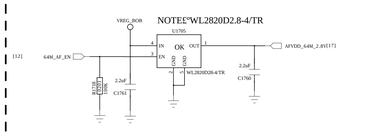

R1766 £ûÓÐCAM AVDD=ÓÃÔ´ALDO

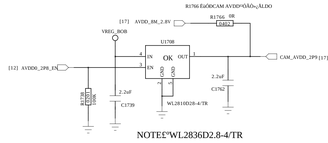

NOTE£ºWL2836D2.8-4/TR

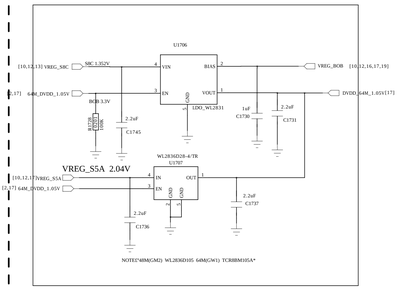

Module	Sensor IC	DOVDD	DVDD	AVDD	AFVDD
	IMX486PQH5-C	1.8V	1.2V	2.7V-4.1~9.2	DW9763 140mA/Max

Main Camera C 2M 2M FF

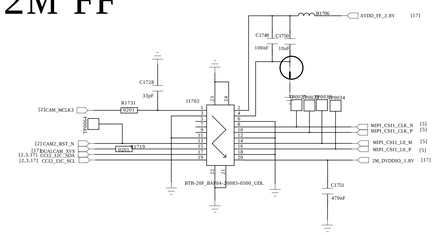

NOTE£ºWL2820D1.8-4/TR 2M VDDIO1.8V

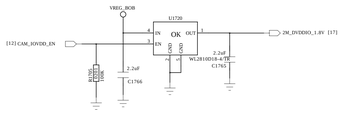

NOTE£ºWL2836D2.8-4/TR

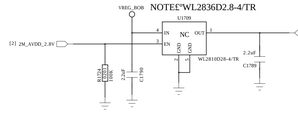

Main Camera D 5M 2M AF

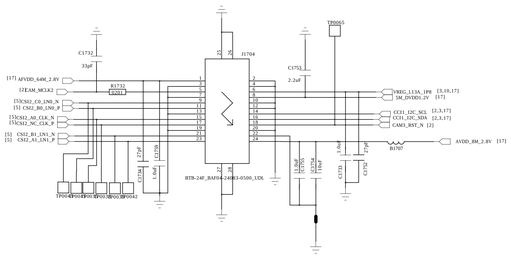

Front Camera

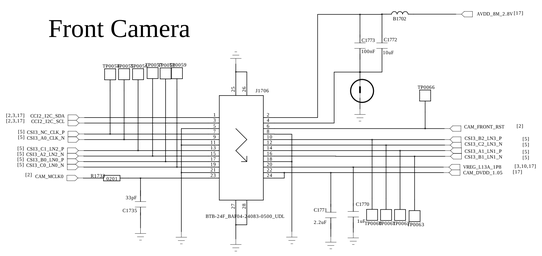

Module	Sensor IC	DOVDD	DVDD	AVDD	AFVDD
OLF0692(ETS)	IMX376-AAJHS-C				
		1.8V	1.05V	2.8V	

LCM

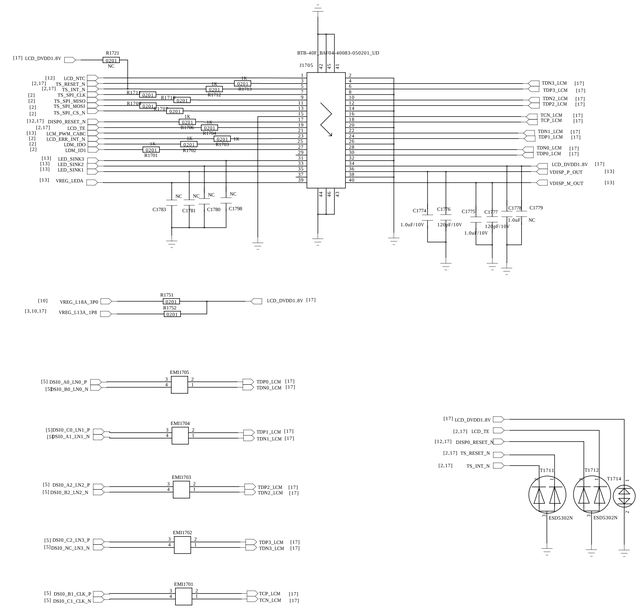

Flash Light

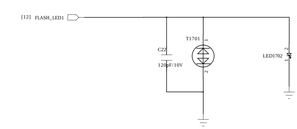

COMPANY: <Company Name>			
TITLE: <Title>			
DRAWN: <Drawn By>	DATED: <Drawn Date>		
CHECKED: <Checked By>	DATED: <Checked Date>	CODE: <Code>	SIZE: A0
QUALITY CONTROL: <QC By>	DATED: <QC Date>	DRAWING NO: <Drawing Number>	REV: <Revision>
RELEASED: <Released By>	DATED: <Release Date>	SCALE: <Scale>	SHEET: 12 OF 30

REVISION RECORD			
LTR	ECO NO:	APPROVED:	DATE:

T-Card

SIM1

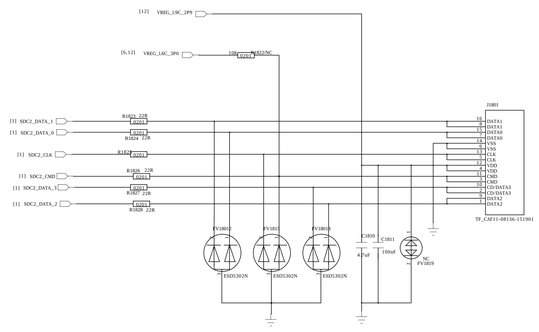

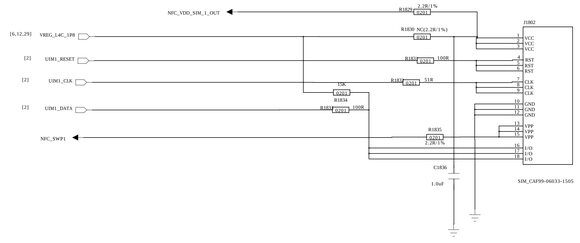

INT

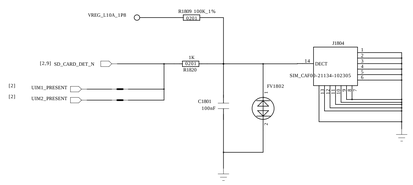

SIM2

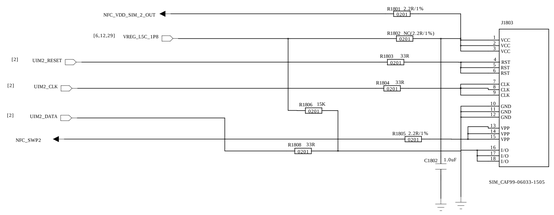

		COMPANY: <Company Name>			
		TITLE: <Title>			
DRAWN: <Drawn By>	DATED: <Drawn Date>				
CHECKED: <Checked By>	DATED: <Checked Date>	CODE: <Code>	SIZE: A0	DRAWING NO: <Drawing Number>	REV: <Revision>
QUALITY CONTROL: <QC By>	DATED: <QC Date>				
RELEASED: <Released By>	DATED: <Release Date>	SCALE: <Scale>		SHEET: 10 OF 30	

REVISION RECORD			
LTR	ECO NO:	APPROVED:	DATE:

M-Sensor

M-Sensor I2C Address: 0x0C

CAD	
0	0X0C
1	0X0D

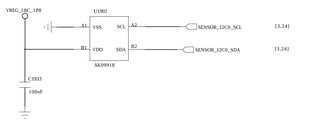

P_SENSOR

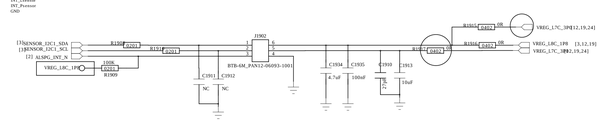

G+Gyro-Sensor

SPI connector

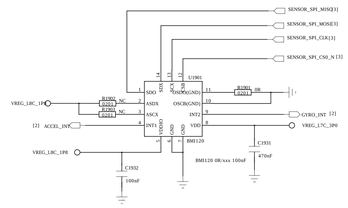

RGB

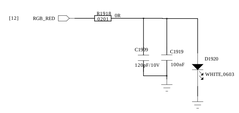

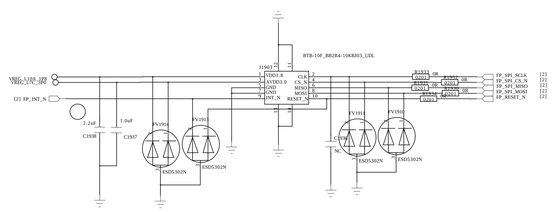

IR

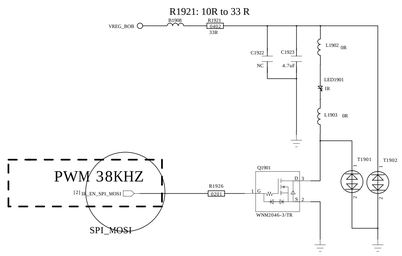

COMPANY: <Company Name>					
TITLE: <Title>					
DRAWN: <Drawn By>	DATED: <Drawn Date>				
CHECKED: <Checked By>	DATED: <Checked Date>	CODE: <Code>	SIZE: A0	DRAWING NO: <Drawing Number>	REV: <Revision>
QUALITY CONTROL: <QC By>	DATED: <QC Date>				
RELEASED: <Released By>	DATED: <Release Date>	SCALE: <Scale>		SHEET: 19 OF 30	

REVISION RECORD			
LTR	ECO NO:	APPROVED:	DATE:

HAPTIC

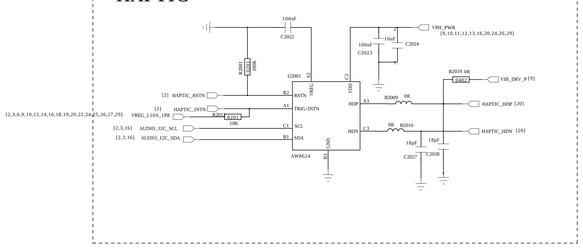

SUB_FPC

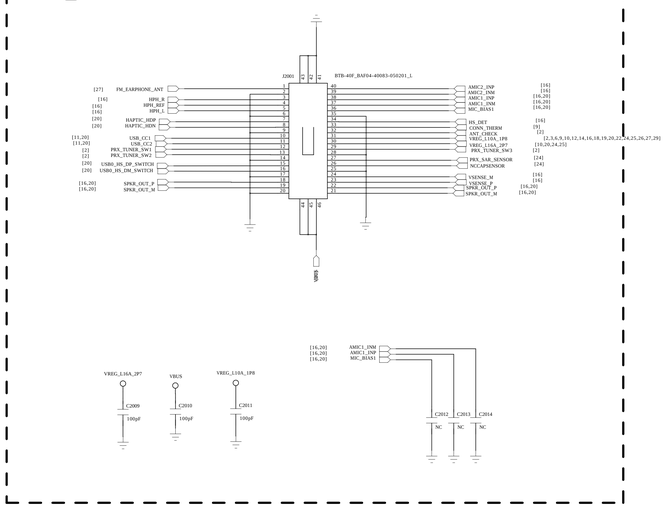

OVP

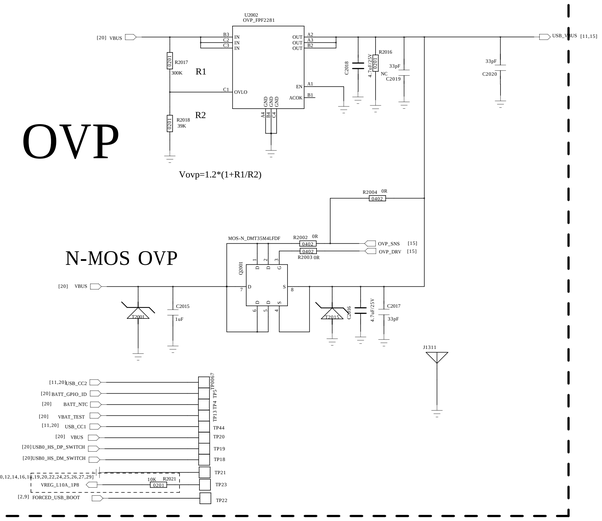

Battery Connector

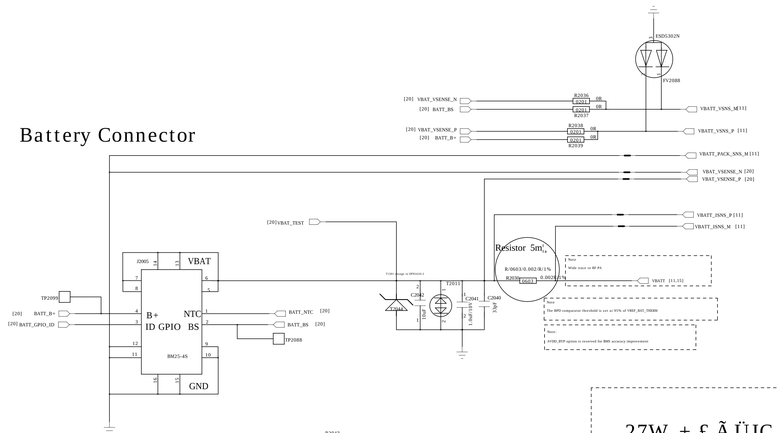

27W ± £ Ã ÜIC

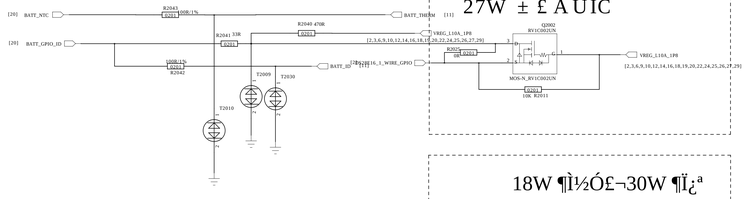

18W ¶Ì½Ó£¬30W ¶Ï¿ª

Sider Key

Signal	Description
KPSNS0	Volume Up
PM_RST_N	Volume Down
KYPD_PWR_N	PWER_ON
PM_RST_N + KYPD_PWR_N	Hardware Reset

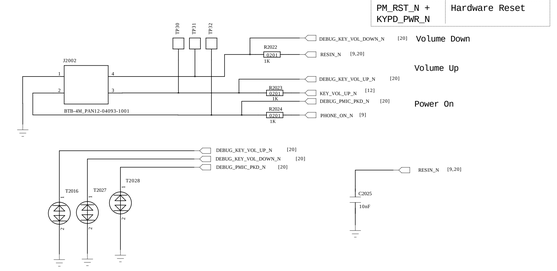

EN=L,SEL1/2=L,Ä¬ÈÏ USBÍ¨ÐÅ£»EN=L,SEL1/2=H D+/D-¶Ì½Ó£¬ÇÐ»»·´Ïò³äµç

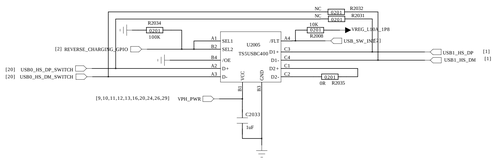

COMPANY: <Company Name>					
TITLE: <Title>					
DRAWN: <Drawn By>	DATED: <Drawn Date>				
CHECKED: <Checked By>	DATED: <Checked Date>				
QUALITY CONTROL: <QC By>	DATED: <QC Date>	CODE: <Code>	SIZE: A0	DRAWING NO: <Drawing Number>	REV: <Revision>
RELEASED: <Released By>	DATED: <Release Date>	SCALE: <Scale>		SHEET: 20 OF 30	

REVISION RECORD			
LTR	ECO NO:	APPROVED:	DATE:

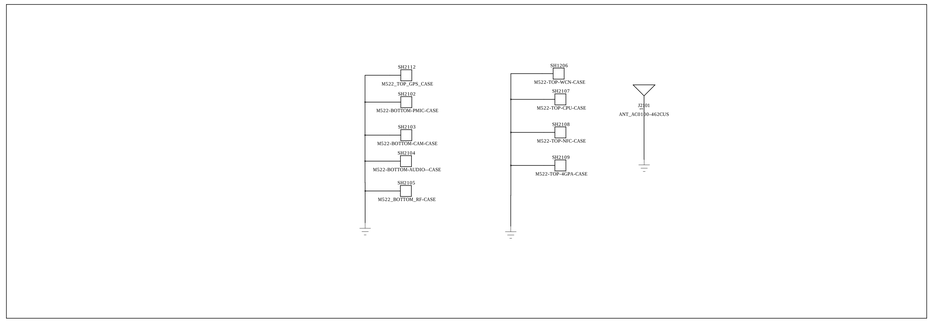

BAD MARK POINT

MARK POINT

		COMPANY: <Company Name>			
		TITLE: <Title>			
DRAWN: <Drawn By>	DATED: <Drawn Date>				
CHECKED: <Checked By>	DATED: <Checked Date>	CODE: <Code>	SIZE: A0	DRAWING NO: <Drawing Number>	REV: <Revision>
QUALITY CONTROL: <QC By>	DATED: <QC Date>				
RELEASED: <Released By>	DATED: <Release Date>	SCALE: <Scale>		SHEET: 24 OF 30	

REVISION RECORD			
LTR	ECO NO:	APPROVED:	DATE:

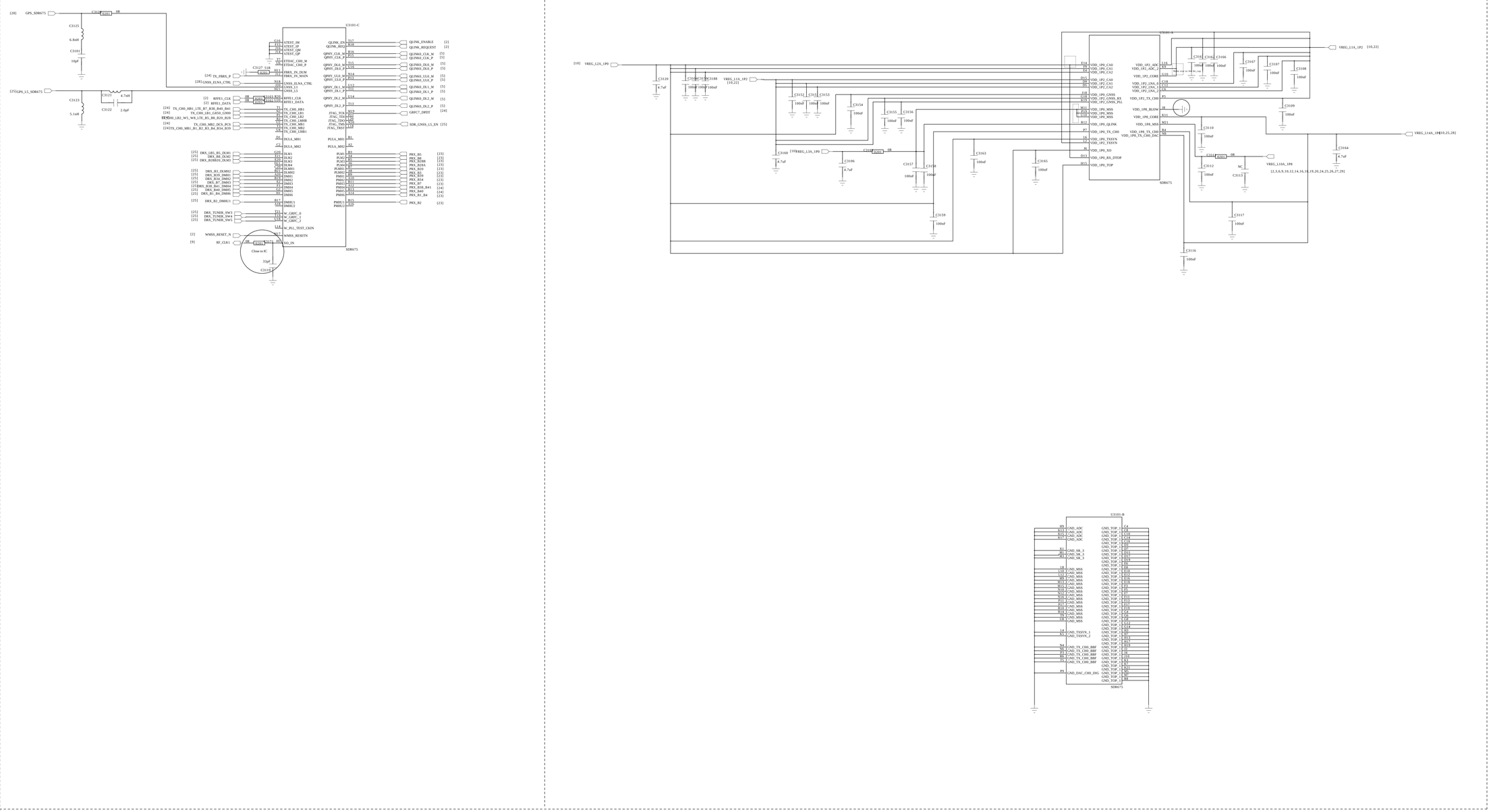

DRAWN: <Drawn By>	DATED: <Drawn Date>	COMPANY: <Company Name>	
CHECKED: <Checked By>	DATED: <Checked Date>	TITLE: <Title>	
QUALITY CONTROL: <QC By>	DATED: <QC Date>	CODE: <Code> / SIZE: A0 / DRAWING NO: <Drawing Number>	REV: <Revision>
RELEASED: <Released By>	DATED: <Release Date>	SCALE: <Scale>	SHEET: 22 OF 30

TRX_B1_B3_B4

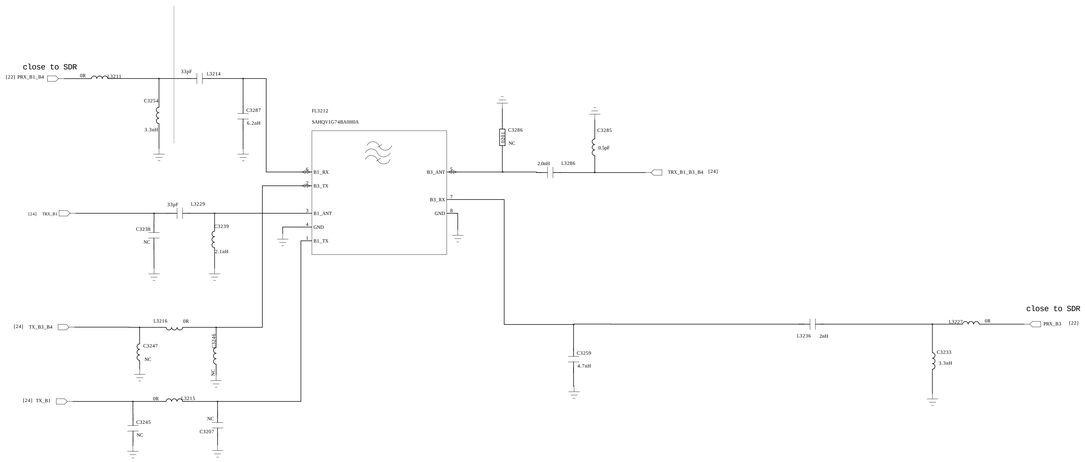

TRX_B7

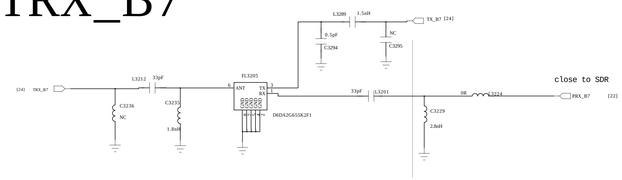

TRX_B8

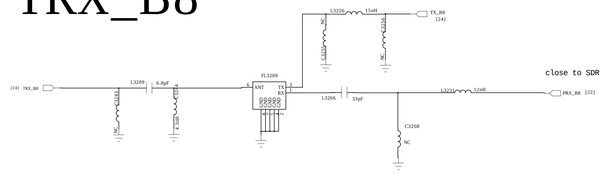

TRX_B2

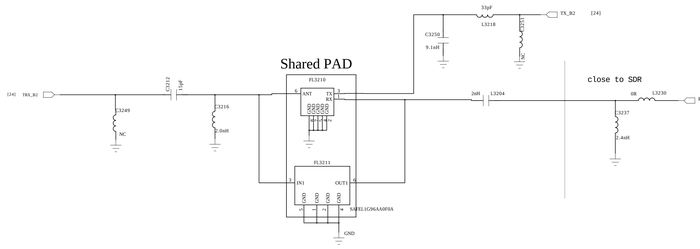

PRX_B34_B39

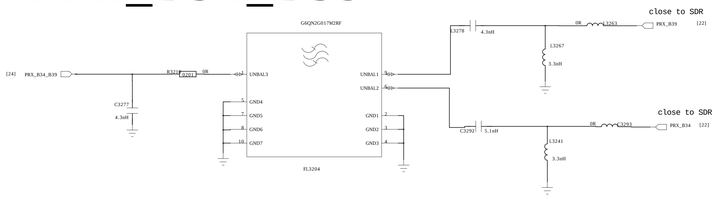

TRX_B5

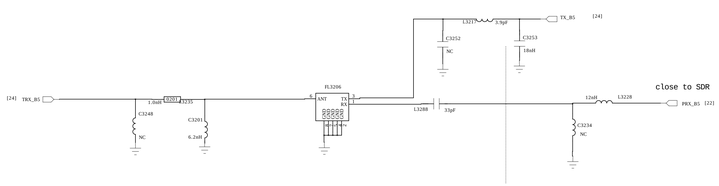

TRX_B28A

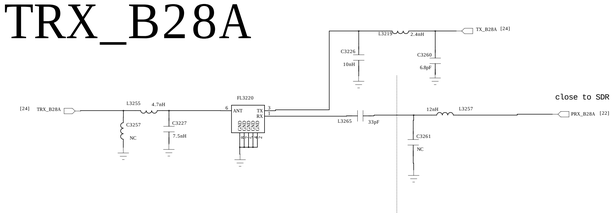

TRX_B20

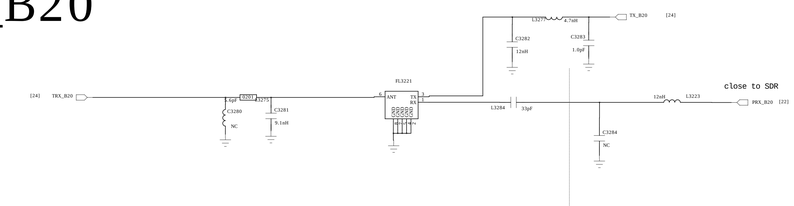

TRX_B28B

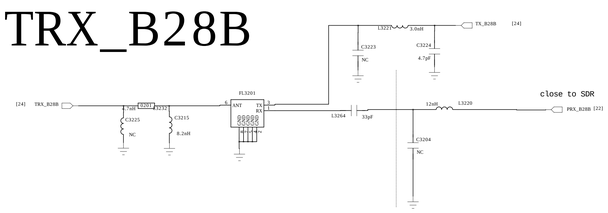

COMPANY: <Company Name>					
TITLE: 20_LTE_DUPLEXER					
DRAWN: LiuMengya	DATED: <Drawn Date>	CODE: <Code>	SIZE: A0	DRAWING NO: <Drawing Number>	REV: <Revision>
CHECKED: LiLi	DATED: <Checked Date>	SCALE: <Scale>		SHEET: 23 of 80	

REVISION RECORD			
LTR	ECO NO:	APPROVED:	DATE:

DPDT

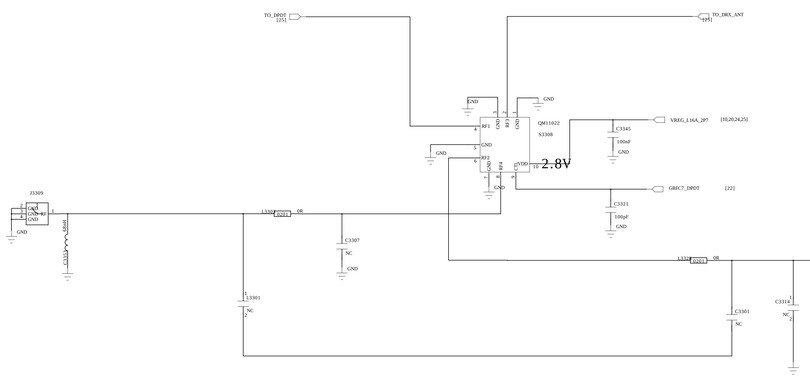

TXM

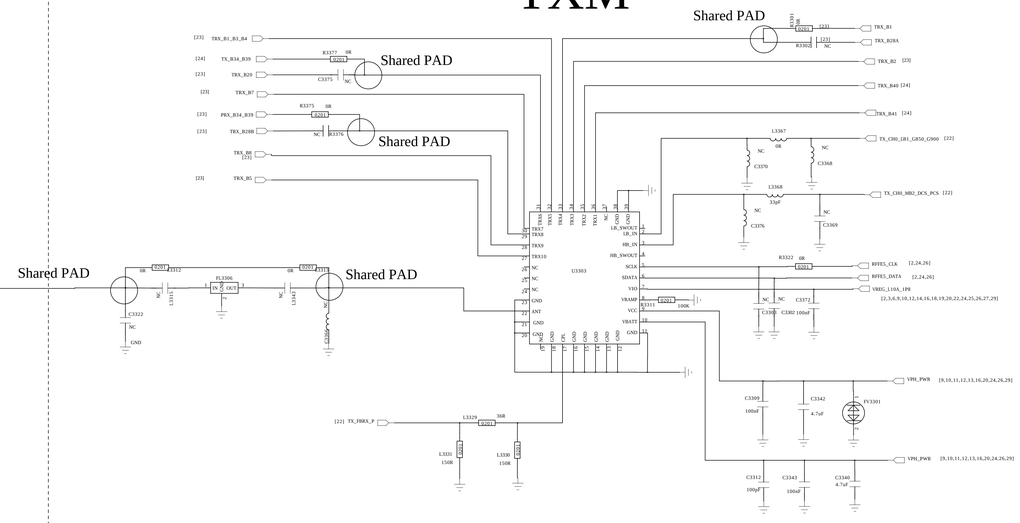

MMMB_PA

PRX_B41

PRX_B40

TRX_B40

TX_B7

TRX_B41

TX_B34_B39

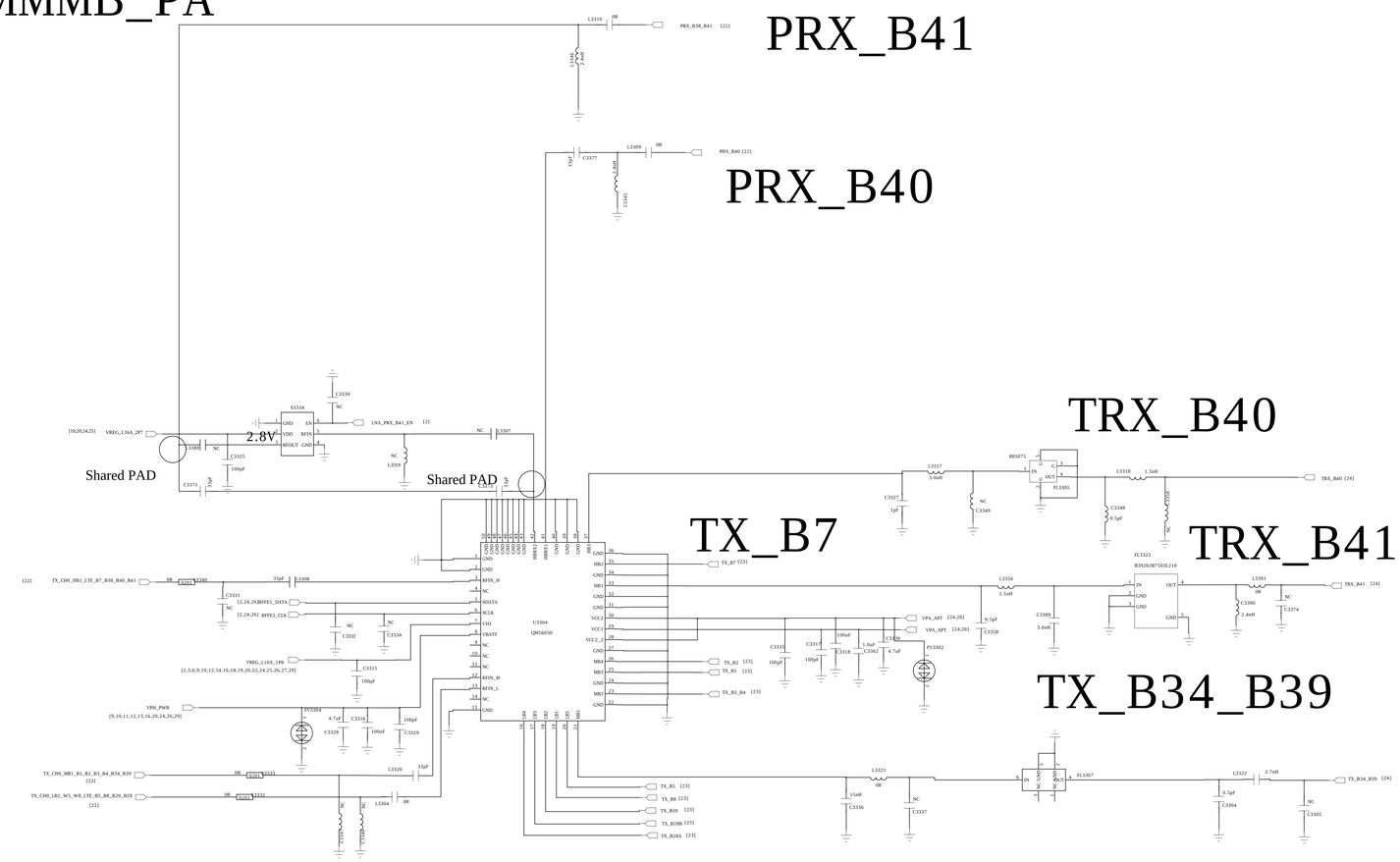

SAR_SENSOR

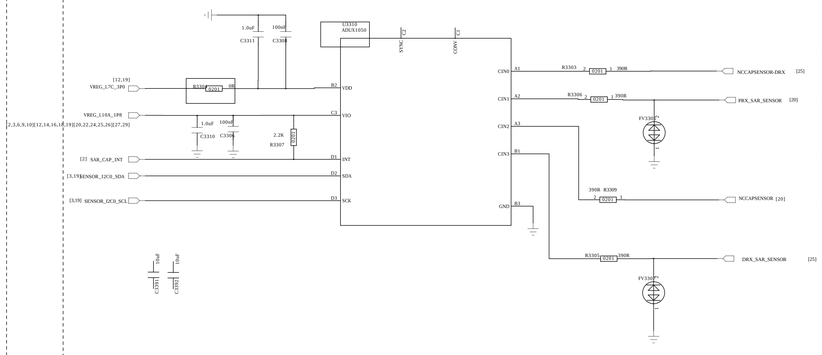

PA_THERMO

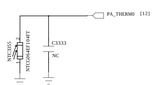

COMPANY: <Company Name>					
TITLE: <Title>					
DRAWN: <Drawn By>	DATED: <Drawn Date>				
CHECKED: <Checked By>	DATED: <Checked Date>	CODE: <Code>	SIZE: A0	DRAWING NO: <Drawing Number>	REV: <Revision>
QUALITY CONTROL: <QC By>	DATED: <QC Date>				
RELEASED: <Released By>	DATED: <Release Date>	SCALE: <Scale>		SHEET: 24 OF 30	

Div Ant Switch

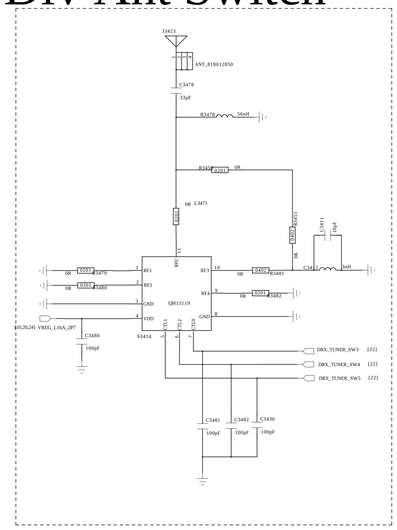

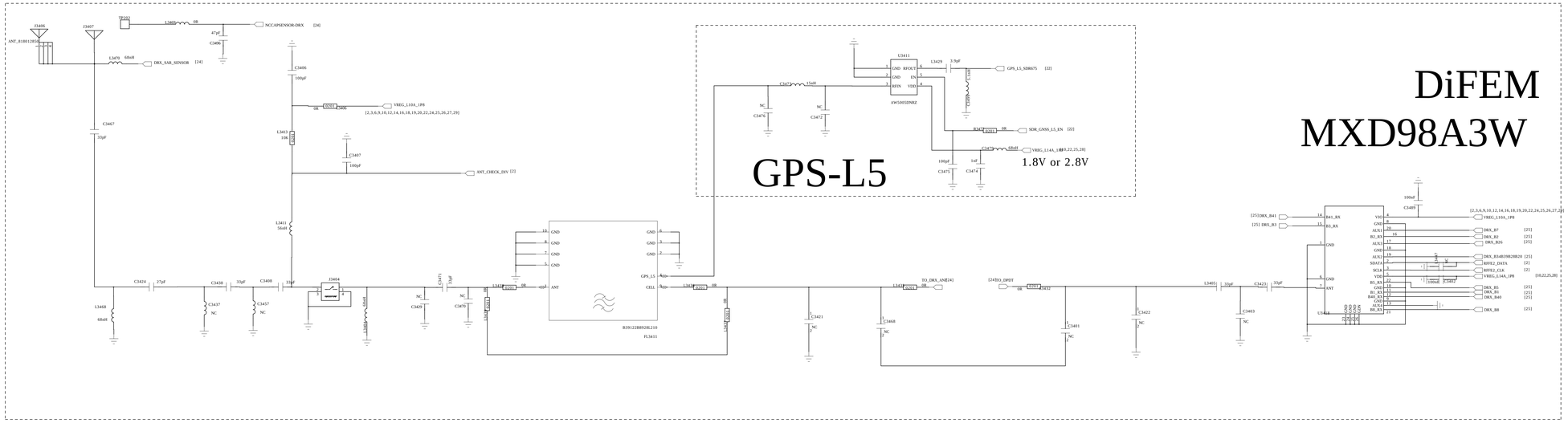

B40_DRX

B41/38_DRX

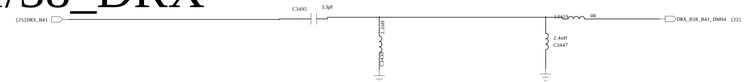

B2_DRX

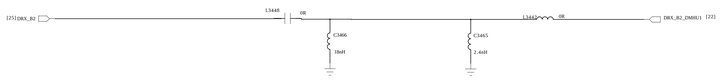

B7_DRX

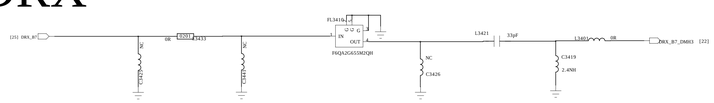

B3_DRX

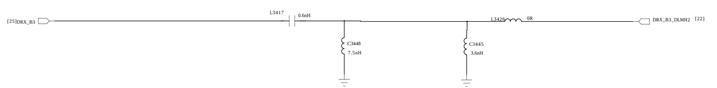

DRX_B34/39_B28/20

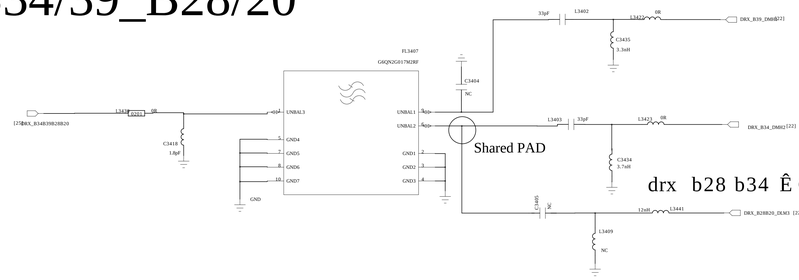

drx b28 b34 Ê Ç · ñ Ò ª ¹ ² Ó Ã Ò » ¸ ö ¿ Ú £ ¿

B1/4_DRX

B5_DRX

B8 DRX

COMPANY:	<Company Name>
TITLE:	21_LTE_B7
CODE:	<Code>
SIZE:	A0
DRAWING NO:	<Drawing Number>
REV:	<Revision>
DRAWN:	LiuMengya
DATED:	<Drawn Date>

REVISION RECORD			
LTR	ECO NO:	APPROVED:	DATE:

APT

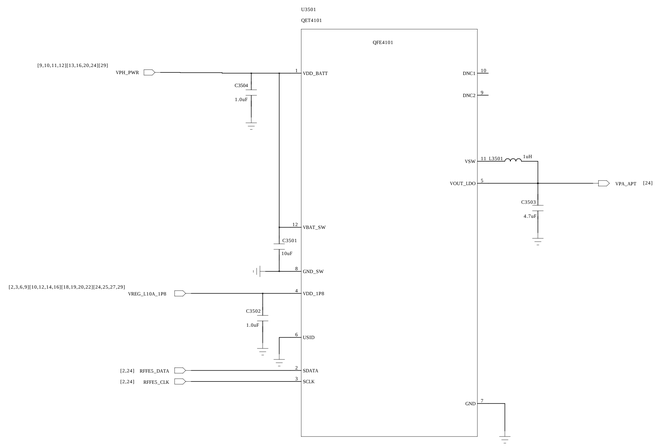

DRAWN: <Drawn By>	DATED: <Drawn Date>
CHECKED: <Checked By>	DATED: <Checked Date>
QUALITY CONTROL: <QC By>	DATED: <QC Date>
RELEASED: <Released By>	DATED: <Release Date>

COMPANY: <Company Name>			
TITLE: <Title>			
CODE: <Code>	SIZE: A0	DRAWING NO: <Drawing Number>	REV: <Revision>
SCALE: <Scale>		SHEET: 26 30	

REVISION RECORD			
LTR	ECO NO:	APPROVED:	DATE:

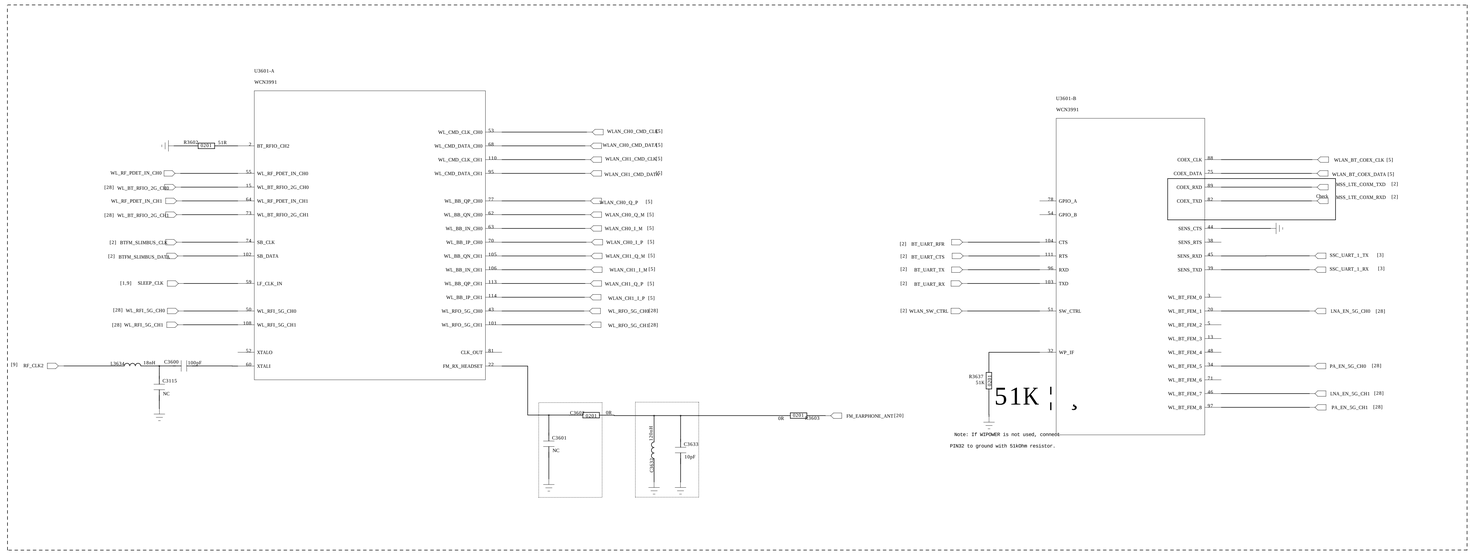

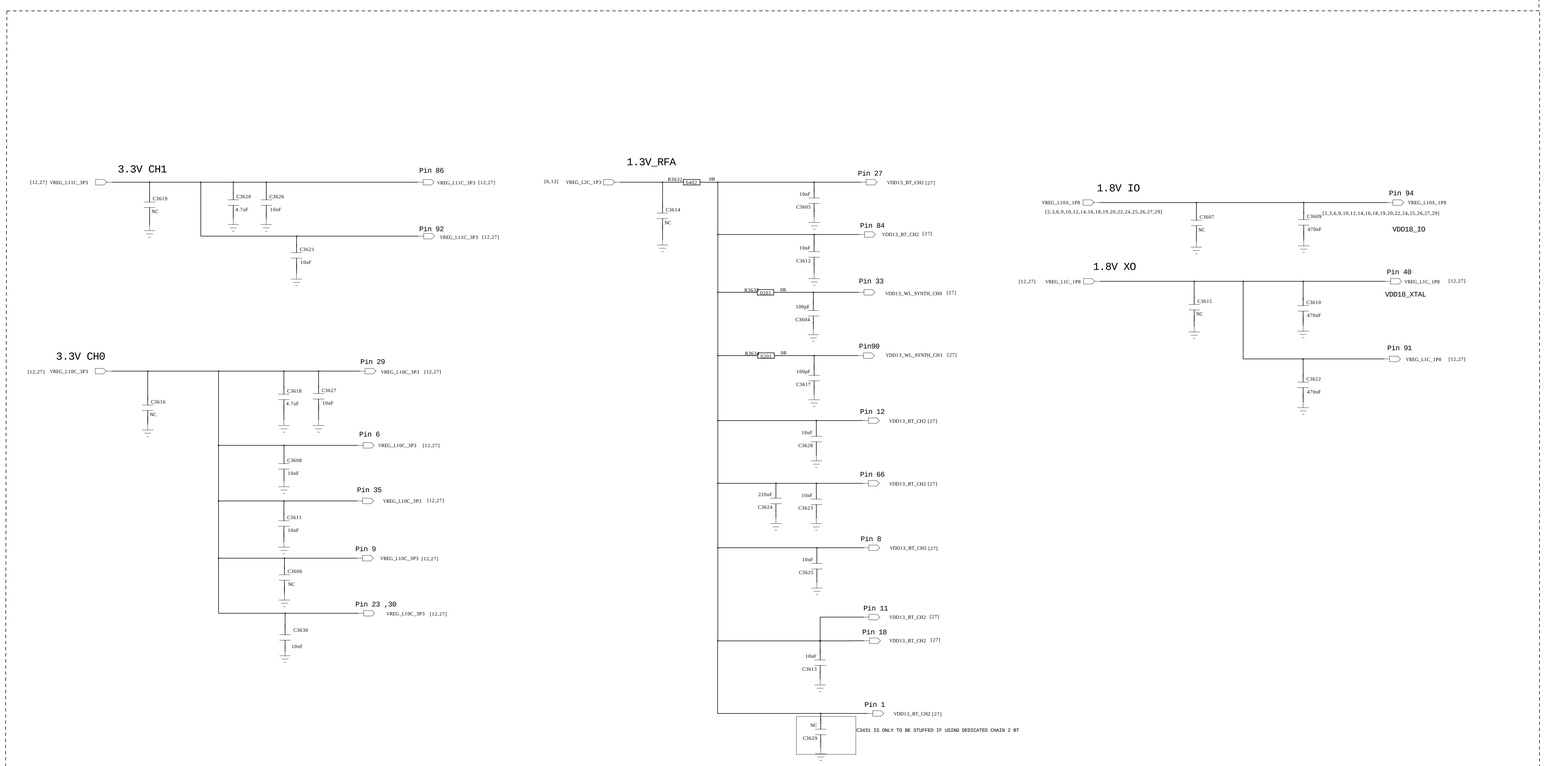

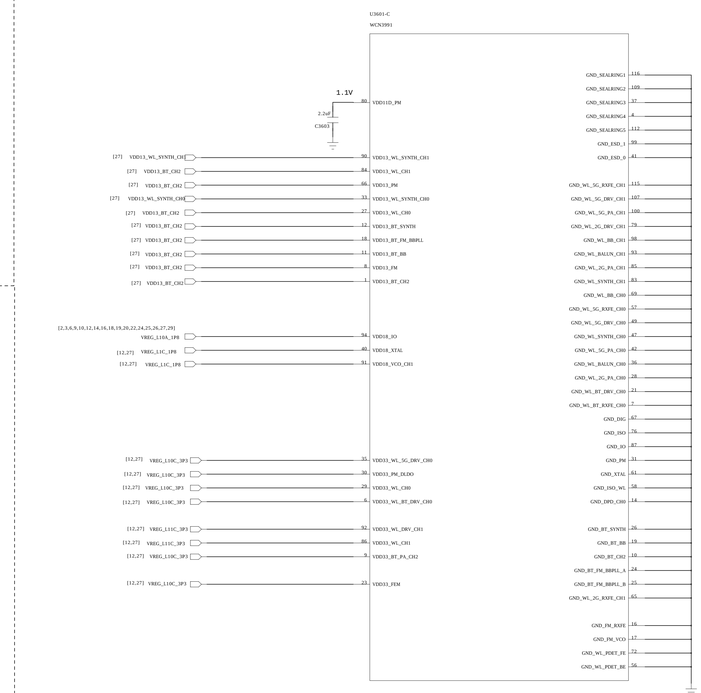

COMPANY: <Company Name>					
TITLE: <Title>					
DRAWN: <Drawn By>	DATED: <Drawn Date>	CODE: <Code>	SIZE: A0	DRAWING NO: <Drawing Number>	REV: <Revision>
CHECKED: <Checked By>	DATED: <Checked Date>				
QUALITY CONTROL: <QC By>	DATED: <QC Date>				
RELEASED: <Released By>	DATED: <Release Date>	SCALE: <Scale>		SHEET: 23 OF 30	

REVISION RECORD			
LTR	ECO NO:	APPROVED:	DATE:

GPS_2G_5G_ANT CH0

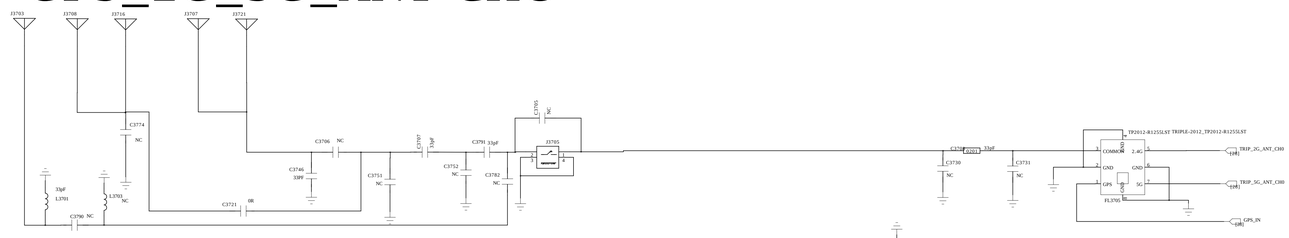

2G_5G_WLAN_CH0

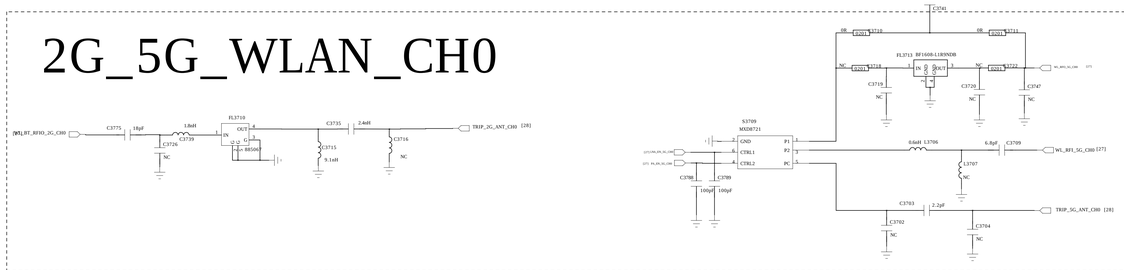

5G wifi ANT CH1

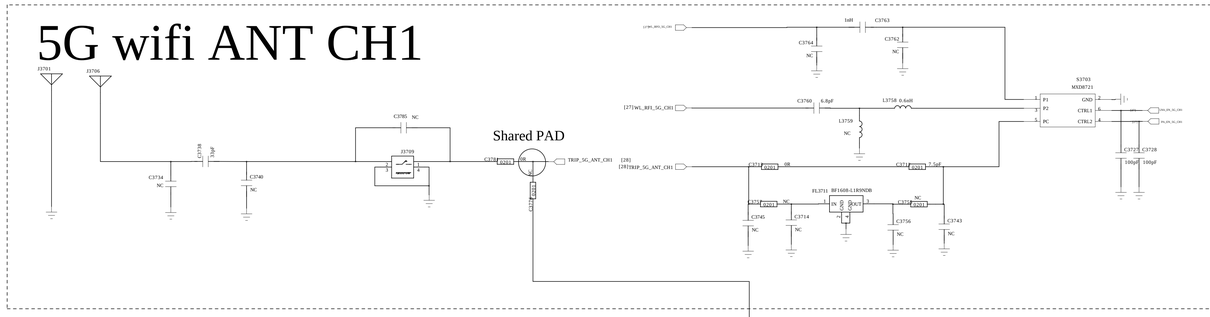

2G_WLAN_CH1_ANT

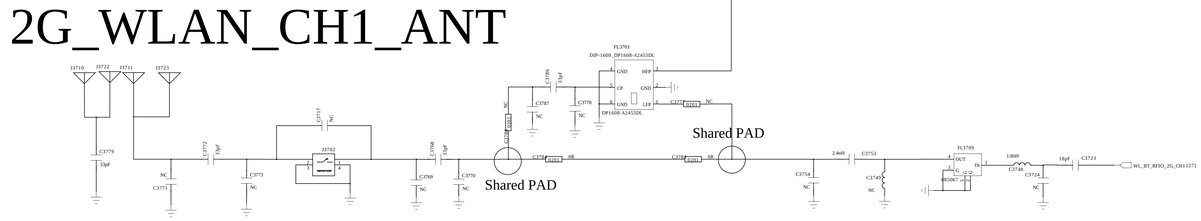

GPS

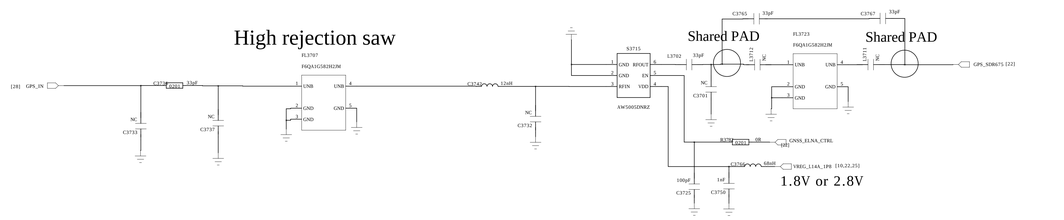

DRAWN: <Drawn By>	DATED: <Drawn Date>	COMPANY: <Company Name>			
CHECKED: <Checked By>	DATED: <Checked Date>	TITLE: <Title>			
QUALITY CONTROL: <QC By>	DATED: <QC Date>	CODE: <Code>	SIZE: A0	DRAWING NO: <Drawing Number>	REV: <Revision>
RELEASED: <Released By>	DATED: <Release Date>	SCALE: <Scale>		SHEET: 28 OF 30	

REVISION RECORD			
LTR	ECO NO:	APPROVED:	DATE:

NFC

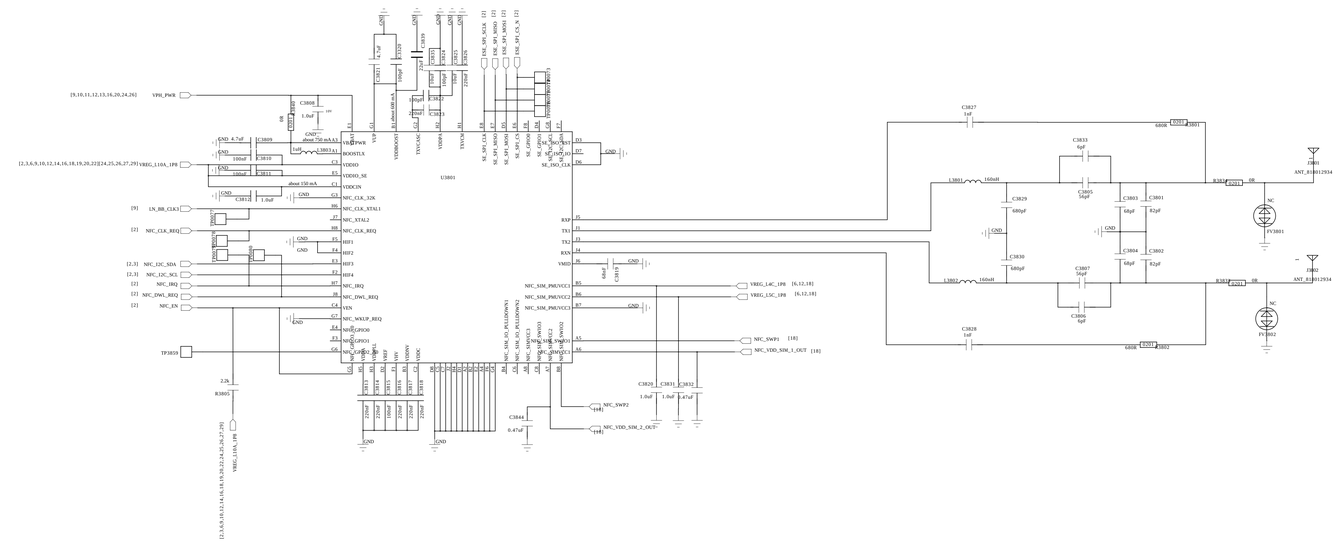

A1-B1

1.LCD POWER change to L18A

2.del R3308

REVISION RECORD			
LTR	ECO NO:	APPROVED:	DATE:

DRAWN: <Drawn By>	DATED: <Drawn Date>
CHECKED: <Checked By>	DATED: <Checked Date>
QUALITY CONTROL: <QC By>	DATED: <QC Date>
RELEASED: <Released By>	DATED: <Release Date>

COMPANY: <Company Name>			
TITLE: <Title>			
CODE: <Code>	SIZE: A0	DRAWING NO: <Drawing Number>	REV: <Revision>
SCALE: <Scale>		SHEET: 30 30	